Cabinet Guard
Internal and External Sensors
IM18-CCM50-MTI/24VDC

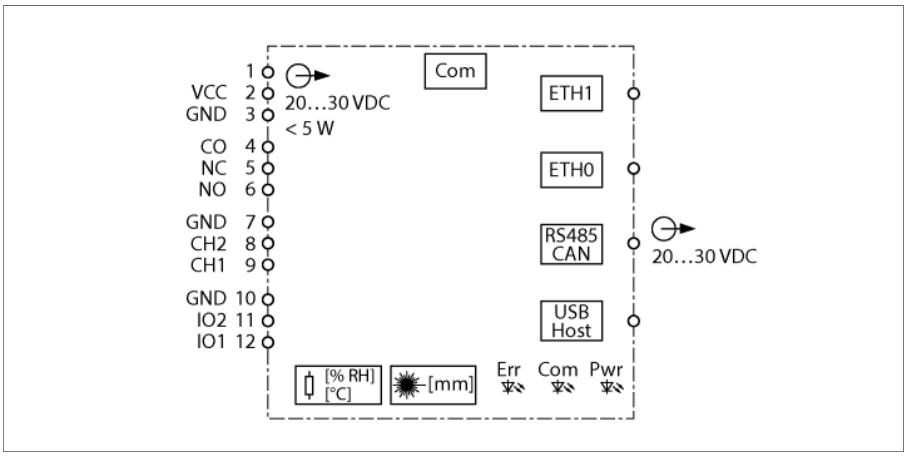

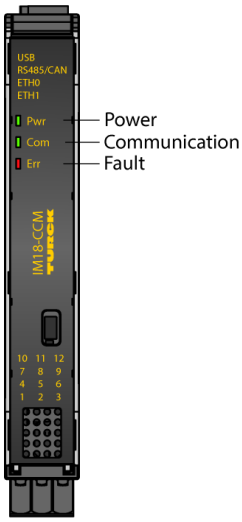

The cabinet guard IM18-CCM50-MTI/24VDC monitors temperature, relative humidity and the distance from the control cabinet door using integrated sensors. For example, the information can be transferred to higher-level systems via the Ethernet interface.

The following interfaces are provided on the device:

- 2 Ethernet interfaces
- CAN/RS485 interface
- 2 GPIOs
- 2 analog inputs (configurable as current or voltage input)
- Changeover contact relay
- USB interface

The operating system integrated in the device is the Linux distribution Debian. Customized programs have been integrated in the device, enabling data to be intelligently preprocessed. The device functions can be programmed as required.

To save space, the narrow, 18-mm housings can be easily mounted in any control cabinet on a DIN rail in accordance with EN 60715.

The device is equipped with removable spring-type terminals.

Product from laser class 1: The device complies with standards 21 CFR 1040.10 and 1040.11 with the exception of IEC 60825-1 Ed. 3, as described in Laser Notice No. 56 of May 8, 2019.

- Microprocessor: AM3358BZCZA100 (TI Sitara 32-Bit ARM Cortex-A8)
- RAM: 8 Gbit 1 GB DDR3L
- Flash: 8GB eMMC
- Debian operating system
- Interfaces:
- 1 × 1 GB Ethernet
- 1 × 100 MB Ethernet
- 1 × CAN/RS485
- 2 digital inputs or outputs
- 2 analog inputs
- 1 × relay
- Temperature detection
- Moisture detection
- Proximity detection
- Supply voltage 24 VDC
- DIN rail mounting

Edition • 2024-10-02T19:35:58+02:00

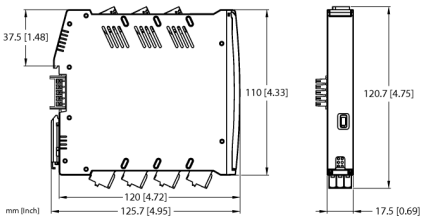

Type	IM18-CCM50-MTI/24VDC
ID	100022405
Nominal voltage	24 VDC
Operating voltage U_B	20…30 VDC
Input circuits	
GPIO	Input: high 12…30 V, 2.5…6.5 mA / low: 0…8 V, 0…1 mA Output: 1.6 V at 100 mA, 2.5 V at 200 mA
Voltage input	0…5/10/20 VDC
Input current	0…35 mA
Output circuits	
Output circuits (digital)	1 x relay (change-over)
Output switching voltage relay	≤ 48 VDC
Switching current per output	≤ 2 A
Response characteristic	
Measuring accuracy (including linearity, hysteresis and repeatability)	≤ 2 % of full scale
Moisture Sensor	
Accuracy max.	± 5 % relative humidity in the range 10…90 %
Temperature Sensor	
Max. accuracy	±2 °C
Distance Sensor	
Measuring range	45…1200 mm
Accuracy	± 5 %

Edition • 2024-10-02T19:35:58+02:00

Mechanical data		
Protection class	IP20	
Flammability class acc. to UL 94	V-0	
Ambient temperature	0…+70 °C	
Storage temperature	-25…+75 °C	
Dimensions	120 x 17.5 x 128 mm	
Weight	151 g	
Mounting instructions	DIN rail (NS35)	
Housing material	Plastic, Polycarbonate/ABS	
Electrical connection	Removable spring-type terminals, 3-pin	
Terminal cross-section	2.5 mm²	
Environmental conditions	Operating height	Up to 2000 m above sea level
	Pollution degree	II
	Standards used	
	Voltage resistance and insulation	
		EN 50178
		EN 61010-1
	Shock	
		EN 60068-2-6
		EN 60068-2-27
	Temperature	
		EN 60068-2-1 Ad
		EN 60068-2-2 Bd
		EN 60068-2-1
	Air humidity	
		EN 60068-2-38
	EMC	
		EN 61000-4-2
		EN 61000-4-3
		EN 61000-4-4
		EN 61000-4-5
		EN 61000-4-6
		EN 61000-4-8
	Emission	
		CISPR16