BI15U-EM30WD-IOL6X2-H1141
Inductive Sensor – IO-Link Communication

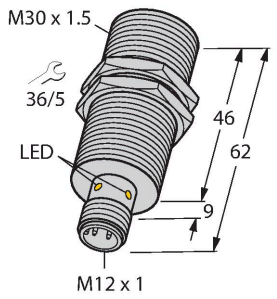

Technical data

Type	BI15U-EM30WD-IOL6X2-H1141
ID	100000266
General data	
Rated switching distance	15 mm
Mounting conditions	Flush
Secured operating distance	≤ (0.81 × Sn) mm
Repeat accuracy	≤ 2 % of full scale
Temperature drift	≤ ±10 %
	≤ ± 20 %, ≤ -25 °C , ≥ +70 °C
Hysteresis	3…15 %
Electrical data	
Operating voltage U_B	10…30 VDC
Ripple U_{ss}	≤ 10 % U_{Bmax}
DC rated operating current I_e	≤ 150 mA
No-load current	≤ 27 mA
Residual current	≤ 0.1 mA
Isolation test voltage	0.5 kV
Short-circuit protection	yes/Cyclic
Voltage drop at I_e	≤ 1.8 V
Wire break/reverse polarity protection	yes/Complete
Communication protocol	IO-Link
Output function	4-wire, NO/NC, PNP/NPN
Output 1	Switching output or IO-Link mode
Output 2	Switching output
DC field stability	300 mT
AC field stability	300 mT_{SS}
Insulation class	⧈

Features

- Threaded barrel, M30 x 1.5
- Stainless steel, 1.4301
- Front cap made of liquid crystal polymer
- Factor 1 for all metals
- Resistant to magnetic fields
- For temperatures of -40 °C…+100 °C
- High protection class IP69K for harsh environments
- Special double-lip seal
- Protection against all common acidic and alkaline cleaning agents
- Laser engraved label, permanently legible
- DC 4-wire, 10…30 VDC
- M12 x 1 connector
- Configuration and communication via IO-Link v1.1 or via standard I/O
- Electrical outputs independently configurable
- Switching distance can be parametrized per output and hysteresis
- Identification via 32-byte memory
- Temperature monitoring with adjustable limits
- Various timer and pulse monitoring functions

Wiring diagram

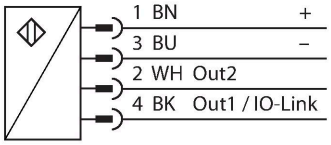

Functional principle

Inductive sensors are designed for wear-free and contactless detection of metal objects. uprox+ sensors have significant advantages due to their patented multi-coil system. They excel thanks to their optimum switching distances, maximum flexibility and operational reliability as well as efficient standardization.

BI15U-EM30WD-IOL6X2-H1141| 25-07-2024 17-32 | Technical modifications reserved

Technical data

Switching frequency	1 kHz
IO-Link	
IO-Link specification	V 1.1
IO-Link port type	Class A
Communication mode	COM 2 (38.4 kBaud)
Process data width	16 bit
Switchpoint information	2 bit
Status bit information	3 bit
Frame type	2.2
Minimum cycle time	8 ms
Function pin 4	IO-Link
Function Pin 2	DI
Maximum cable length	20 m
Included in the SIDI GSDML	Yes
Mechanical data	
Design	Threaded barrel, M30 x 1.5
Dimensions	62 mm
Housing material	Stainless steel, 1.4301 (AISI 304)
Active area material	Plastic, LCP
Admissible pressure on front cap	≤ 10 bar
Max. tightening torque of housing nut	75 Nm
Electrical connection	Connector, M12 × 1
Environmental conditions	
Ambient temperature	-40…+100 °C
Vibration resistance	55 Hz (1 mm)
Shock resistance	100 g (11 ms)
Protection class	IP68 IP69K
MTTF	874 years acc. to SN 29500 (Ed. 99) 40 °C
Power-on indication	LED, Green
Switching state	LED, Yellow

BI15U-EM30WD-IOL6X2-H1141| 25-07-2024 17-32 | Technical modifications reserved

Mounting instructions

Mounting instructions/Description

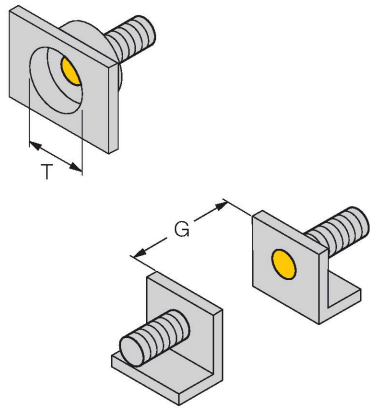

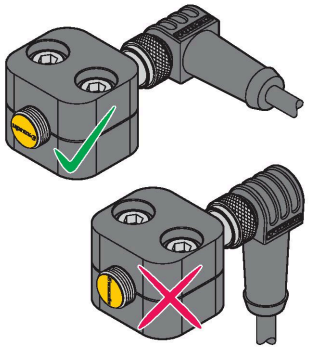

Distance D	60 mm
Distance W	3 x Sn
Distance T	3 x B
Distance S	1.5 x B
Distance G	6 x Sn
Diameter active area B	Ø 30 mm

When installing the sensor in combination with the illustrated half-shell-clamp, observe its correct alignment towards the clamp. For this, see the uprox-lettering on the front cap of the sensor and the adjacent installation drawing.

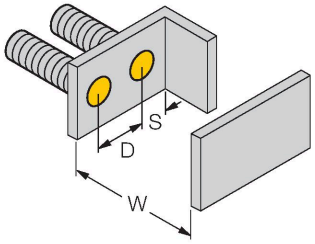

Accessories

MW30	6945005

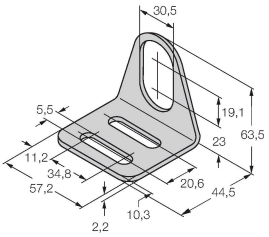

Mounting bracket for threaded barrel sensors; material: Stainless steel A2 1.4301 (AISI 304)

BSS-30	6901319

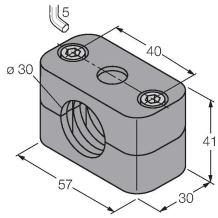

Mounting clamp for smooth and threaded barrel sensors; material: Polypropylene

PN-M30	6905308

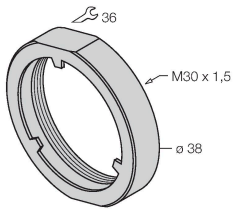

Protective nut for M30 x 1 threaded barrel devices; material: Stainless steel A2 1.4305 (AISI 303)

BI15U-EM30WD-IOL6X2-H1141| 25-07-2024 17-32 | Technical modifications reserved

Accessories

Dimension drawing	Type	ID	
	RKC4.4T-2/TEL	6625013	Connection cable, M12 female connector, straight, 4-pin, cable length: 2 m, jacket material: PVC, black; cULus approval

Accessories

Dimension drawing	Type	ID	
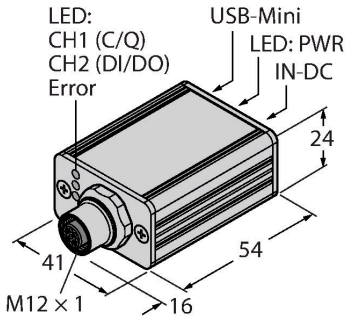	USB-2-IOL-0002	6825482	IO-Link Master with integrated USB port

BI15U-EM30WD-IOL6X2-H1141| 25-07-2024 17-32 | Technical modifications reserved